S 88 50 Hz

Laufrad:	Feststoffe bis:	Umdrehung:
Impeller: **218** mm Ø	Solids up to: **35** mm Ø	Speed: **2900** min^{-1}
Girante:	Solidi fino a:	Velocità:

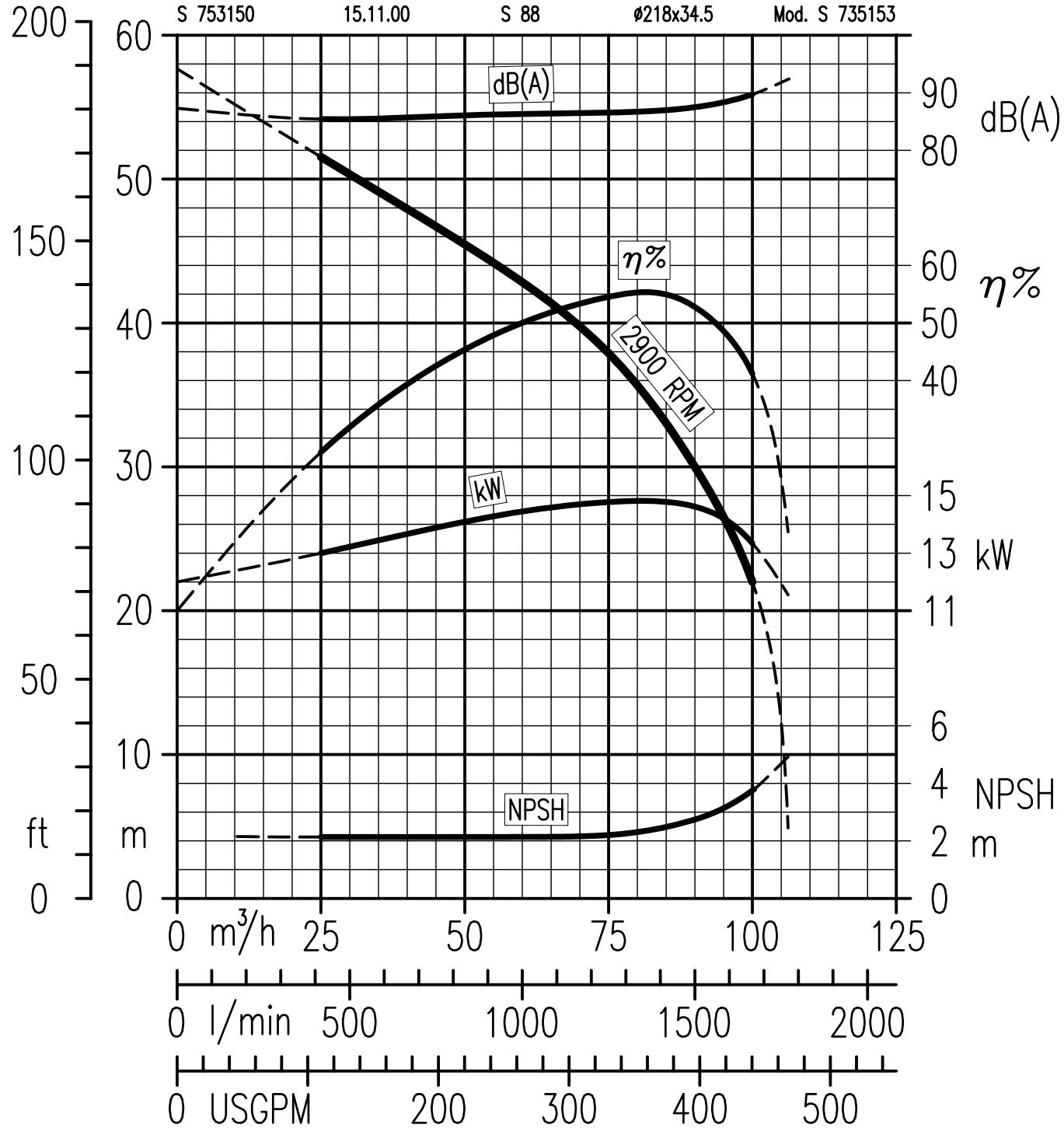

GERMANY • Tel. +49 89 9048660 • Fax +49 89 9043447 • germany@victorpumps.com
ITALY • Tel. +39 0498961266 • Fax +39 0498961255 • italy@victorpumps.com

S 88 ...T

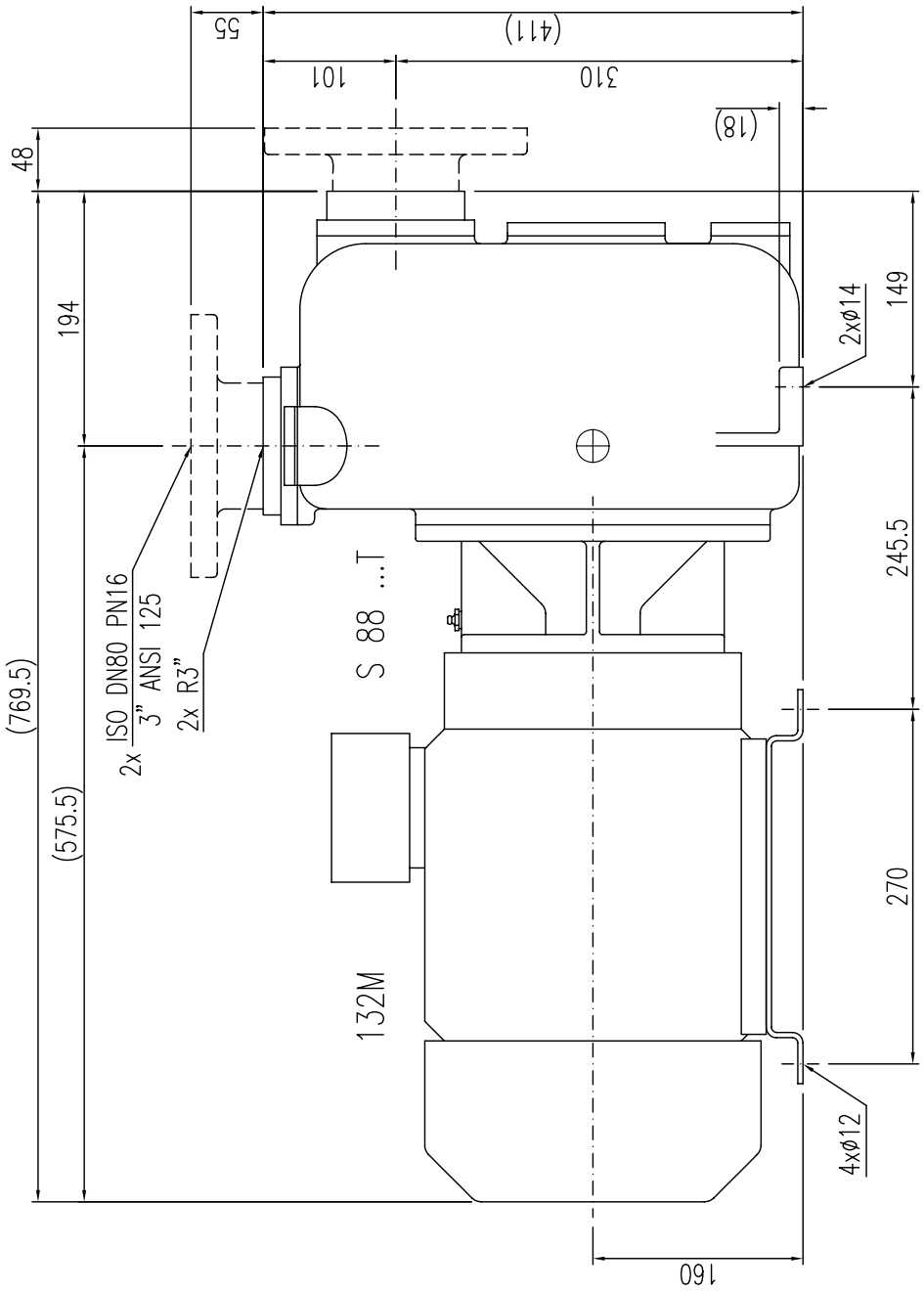

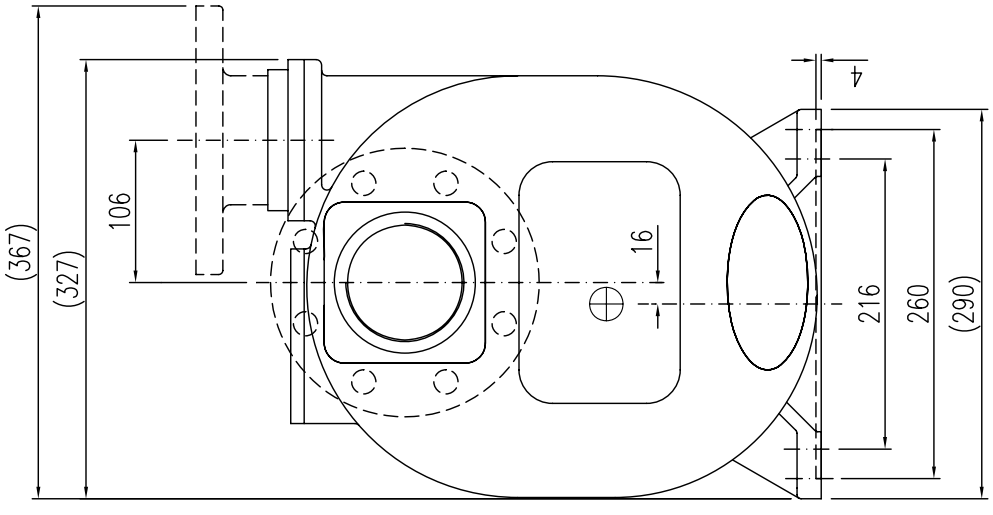

GERMANY • Tel. +49 89 9048660 • Fax +49 89 9043447 • germany@victorpumps.com
ITALY • Tel. +39 0498961266 • Fax +39 0498961255 • italy@victorpumps.com

S 88 ...BB(160)

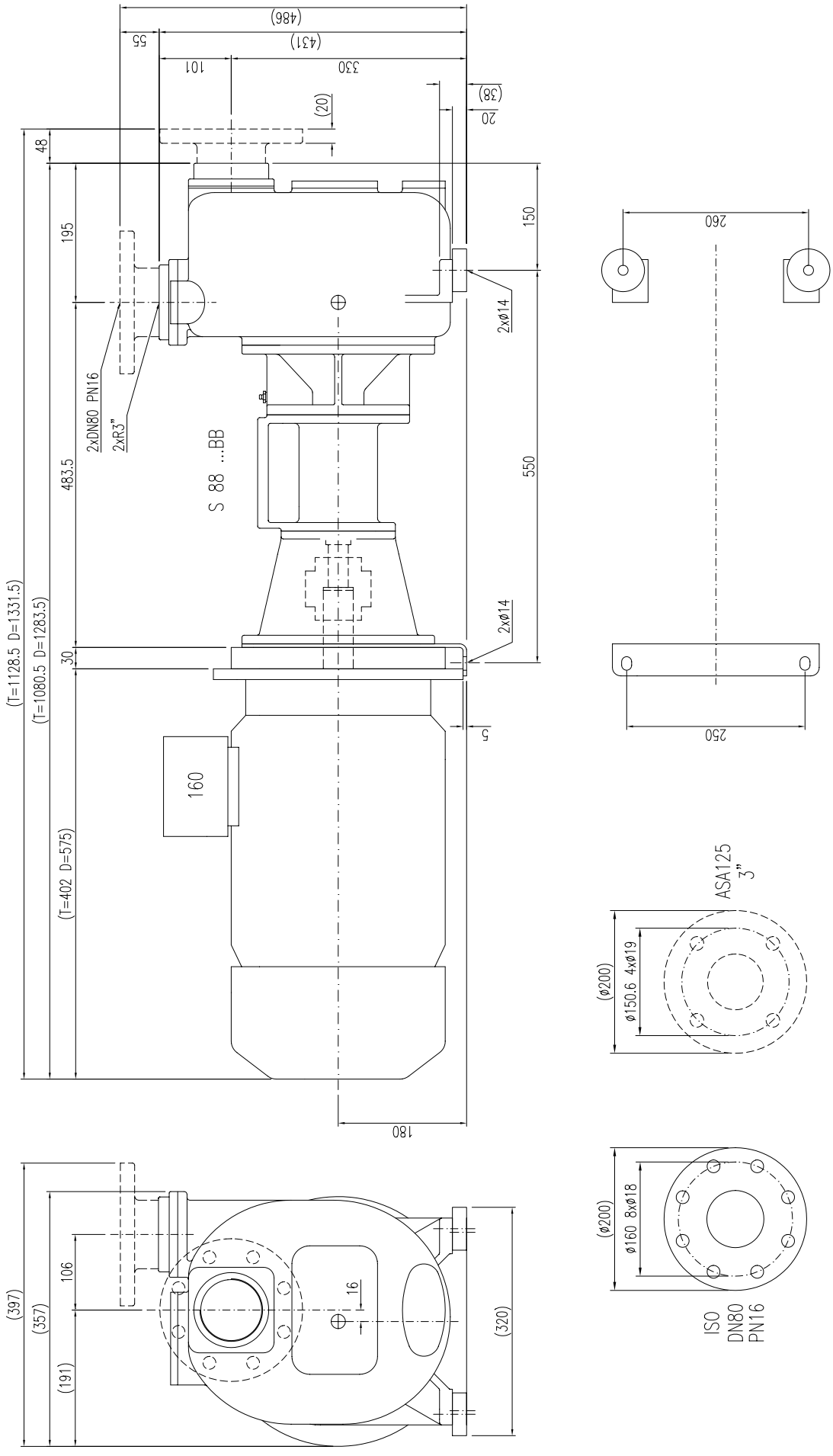
(486)
55
(431)
101
330
(38)
20
(20)
48
195
150
2xø14
2xDN80 PN16
2xR3"
S 88 ...BB
483.5
550
(T=1128.5 D=1331.5)
(T=1080.5 D=1283.5)
30
2xø14
5
160
(T=402 D=575)
180
260
250
ASA125
3"
(ø200)
ø150.6 4xø19
(ø200)
ø160 8xø18
ISO
DN80
PN16
(397)
(357)
(191)
106
16
(320)

S 88 ...B/8(160)

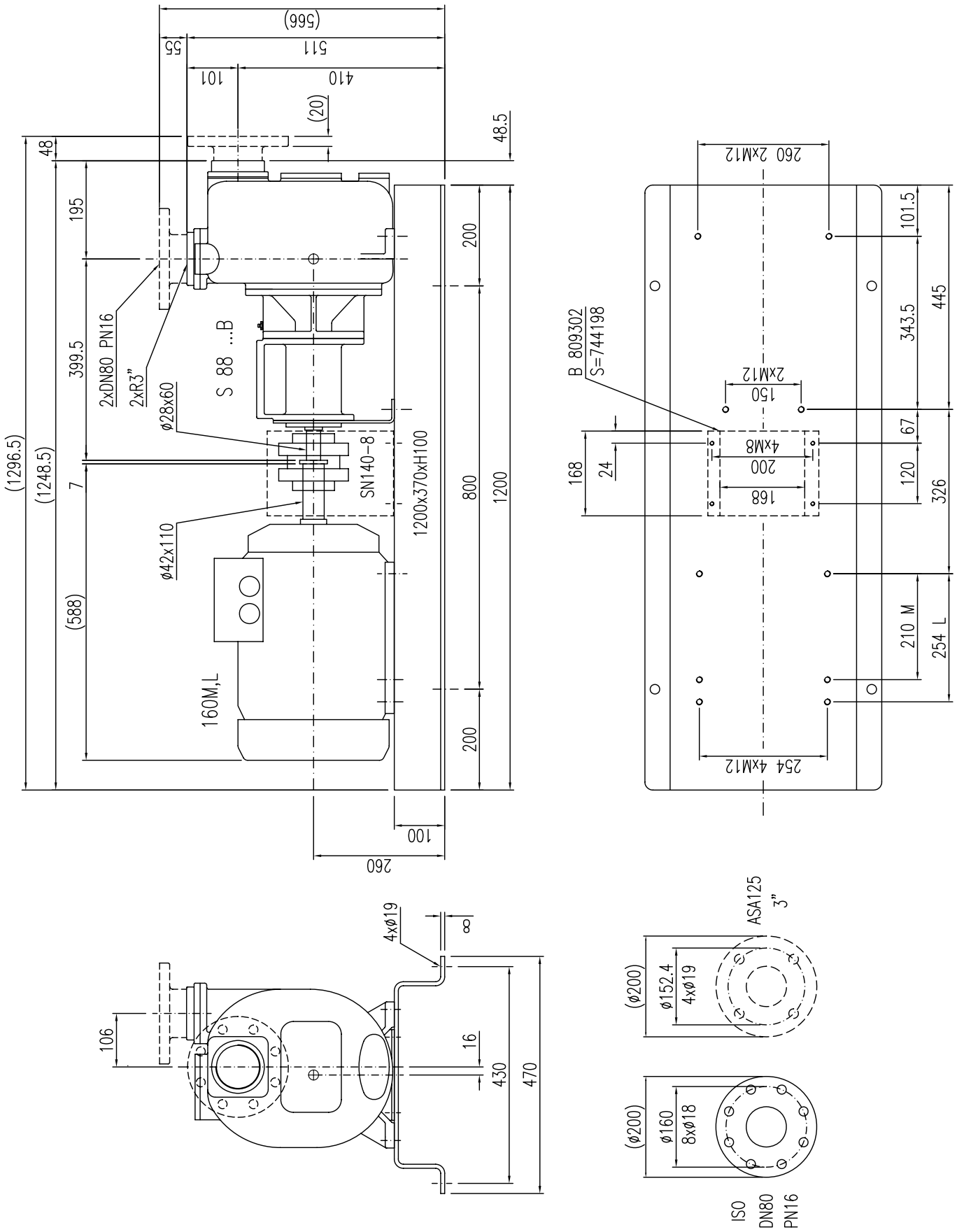
(566)
55
511
101
410
(20)
48.5
48
195
399.5
(1296.5)
(1248.5)
7
(588)
2xDN80 PN16
2xR3"
S 88 ...B
ø28x60
ø42x110
160M,L
SN140-8
1200x370xH100
200
800
1200
200
100
260
260 2xM12
101.5
343.5
445
B 809302
S=744198
2xM12
150
4xM8
200
168
168
24
67
120
326
210 M
254 L
254 4xM12
4xø19
8
106
16
430
470
ASA125
3"
(ø200)
ø152.4
4xø19
(ø200)
ø160
8xø18
ISO
DN80
PN16

S 85,88 ...B

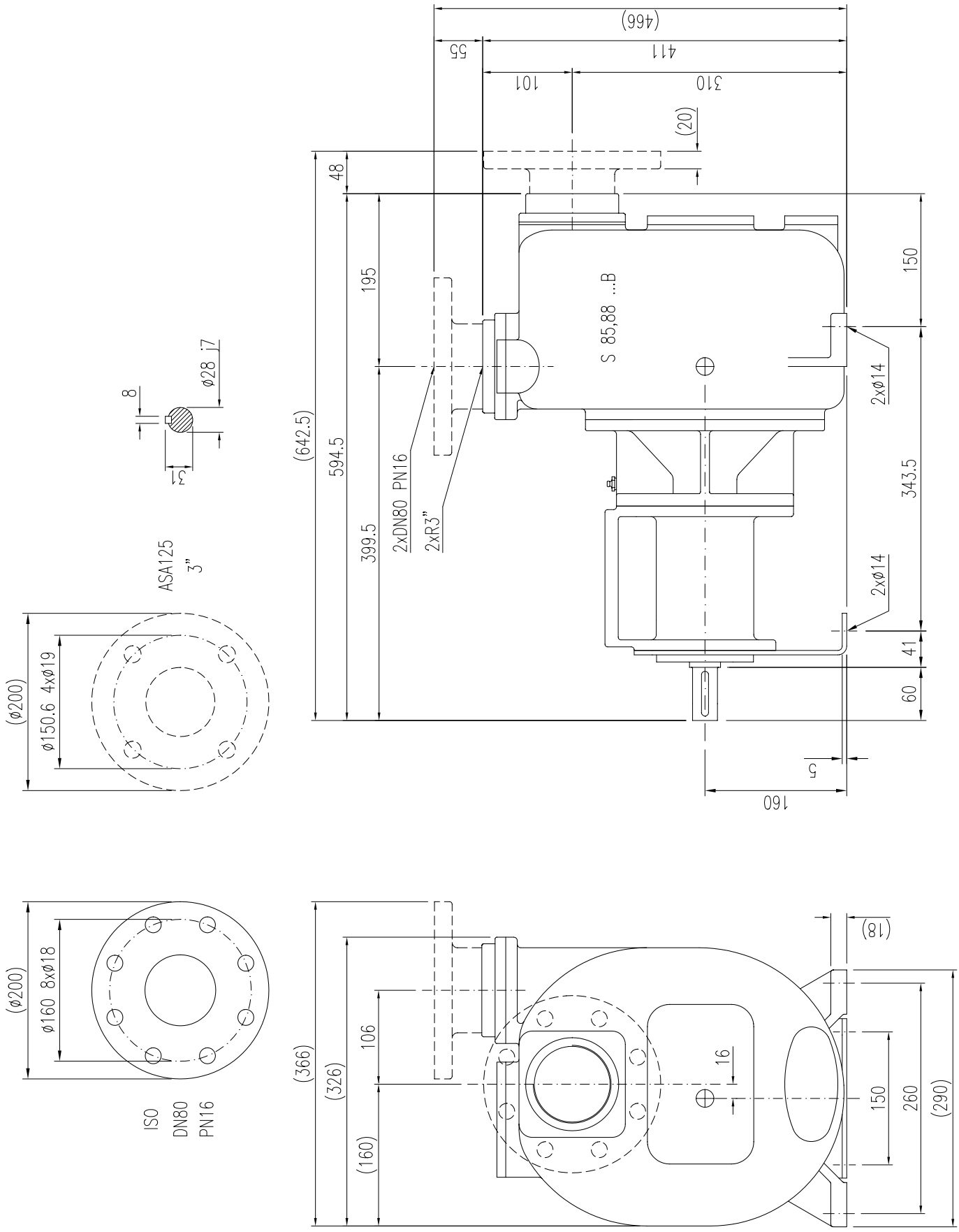
(466)
411
55
310
101
(20)
48
195
150
S 85,88 ...B
(642.5)
594.5
399.5
2xDN80 PN16
2xR3"
2xø14
343.5
2xø14
41
60
5
160
8
ø28 j7
12
ASA125
3"
(ø200)
ø150.6 4xø19
(ø200)
ø160 8xø18
ISO
DN80
PN16
(366)
(326)
(160)
106
16
(18)
150
260
(290)